TOSHIBA

FILE NO. 140-200502

SERVICE MANUAL

COLOR TELEVISION/ VIDEO CASSETTE RECORDER

MV20Q41

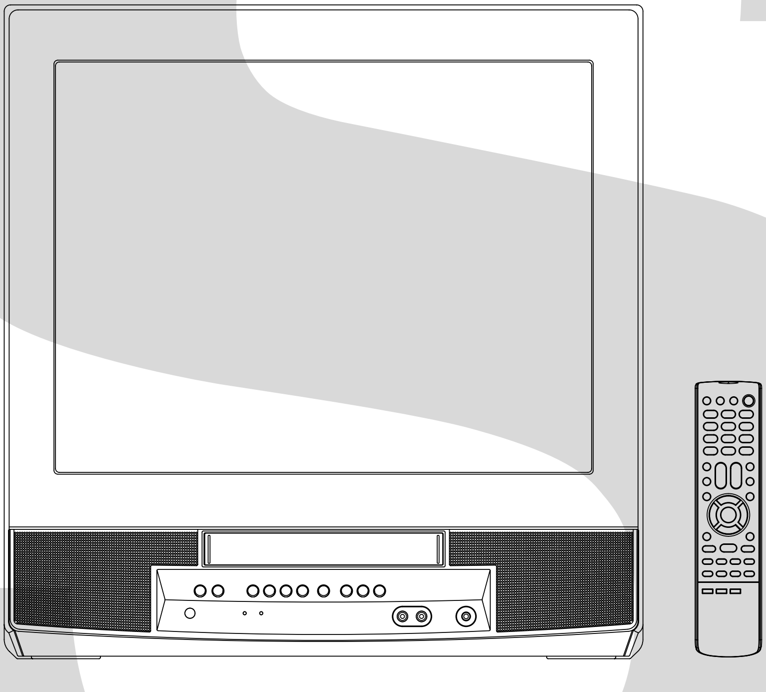

Jan.,2005 O

Downloaded from www.Manualslib.com manuals search engine

TV BLOCK DIAGRAM

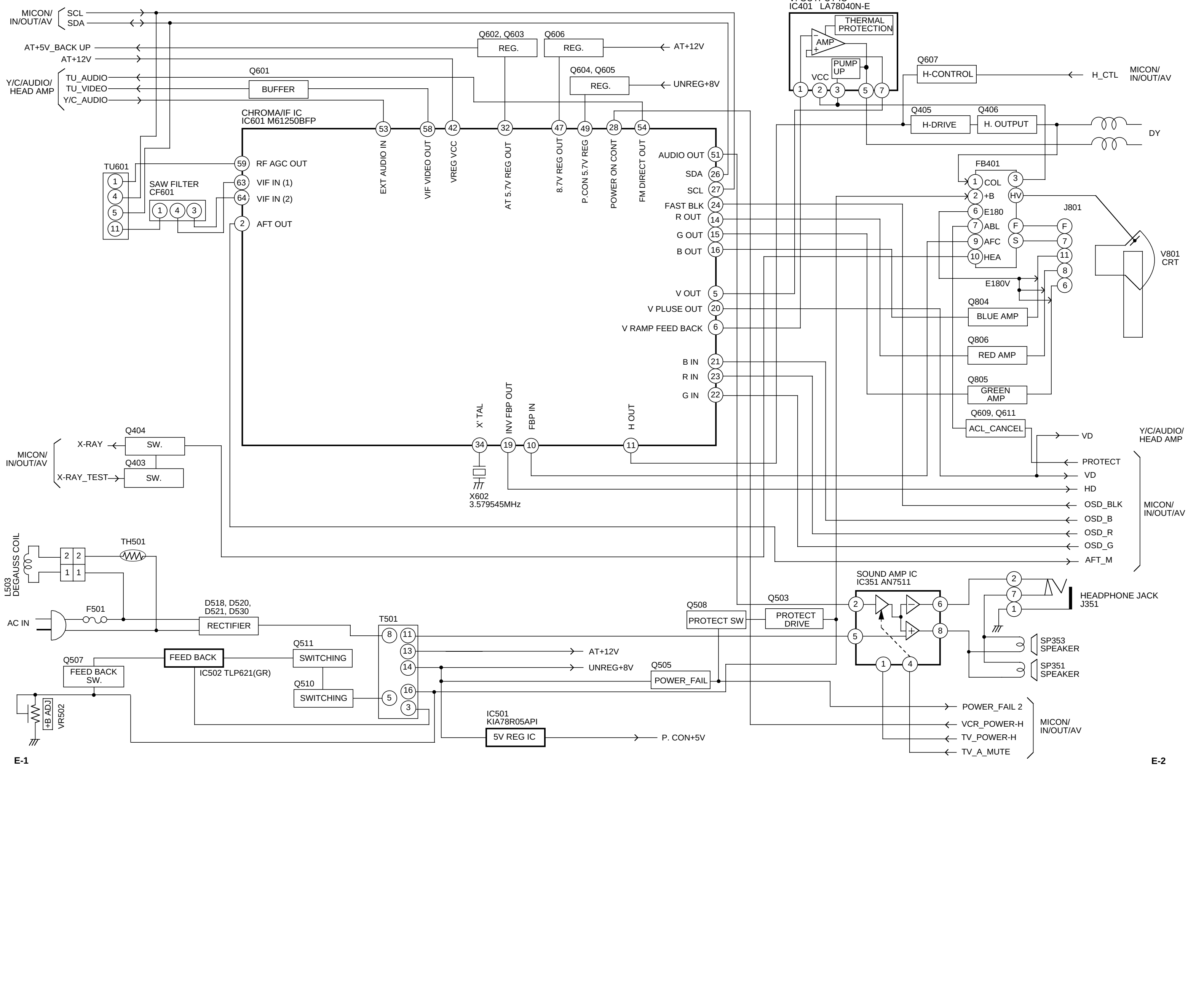

Downloaded from www.Manualslib.com manuals search engine

Y/C/AUDIO/HEAD AMP BLOCK DIAGRAM

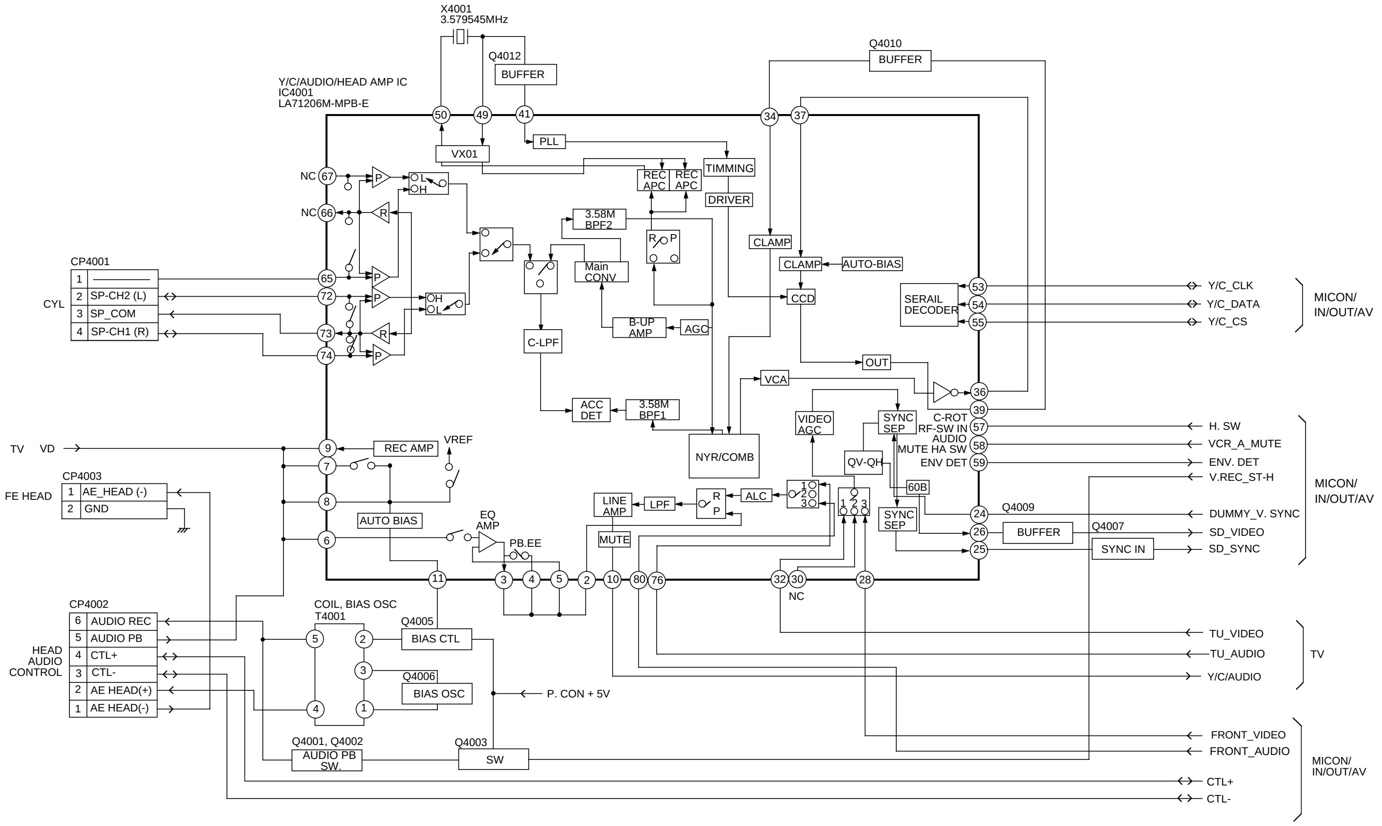

Downloaded from www.Manualslib.com manuals search engine

MICON/IN/OUT/AV BLOCK DIAGRAM

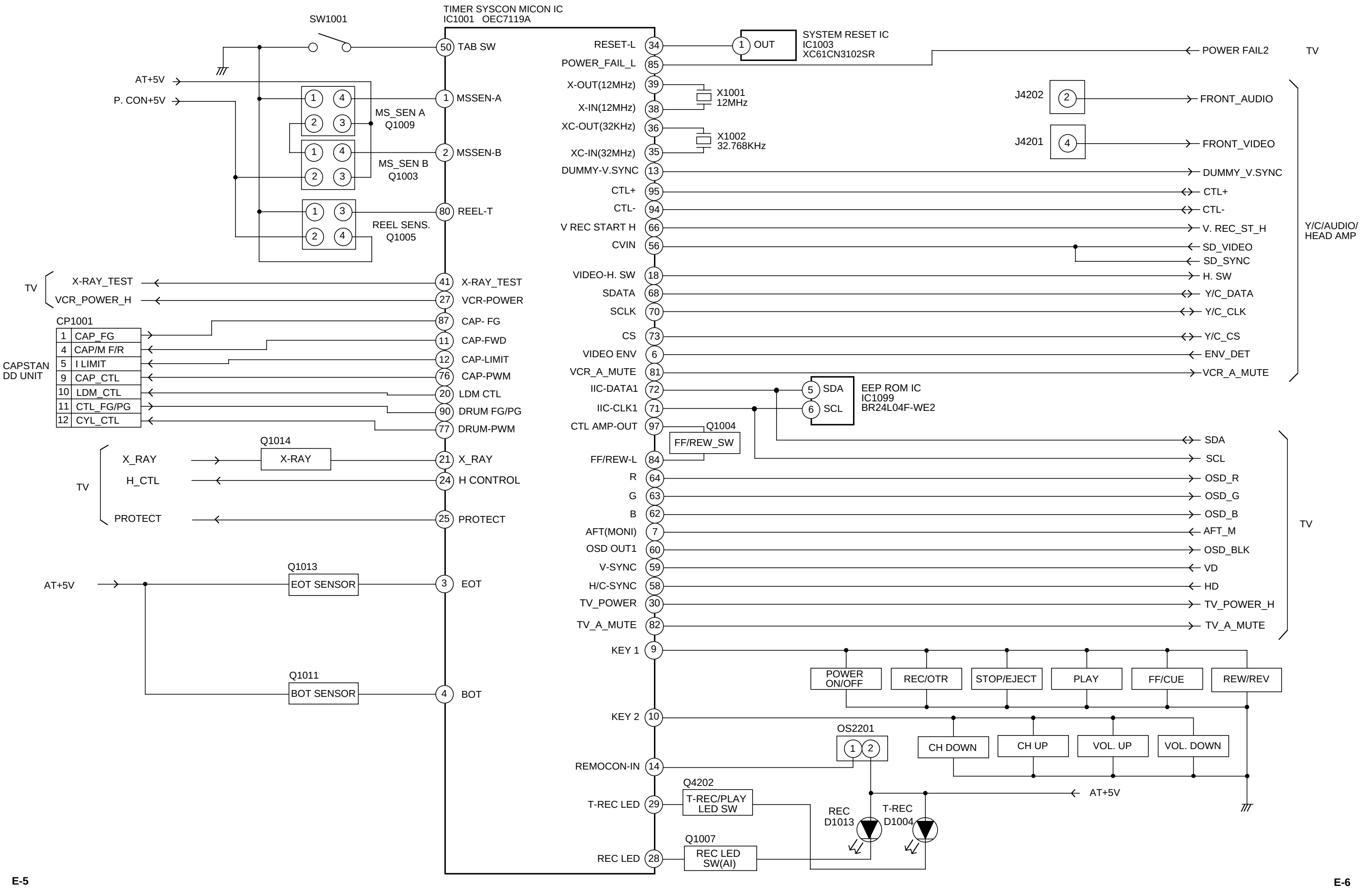

Downloaded from www.Manualslib.com manuals search engine

PRINTED CIRCUIT BOARDS
SYSCON/CRT (INSERTED PARTS)
SOLDER SIDE

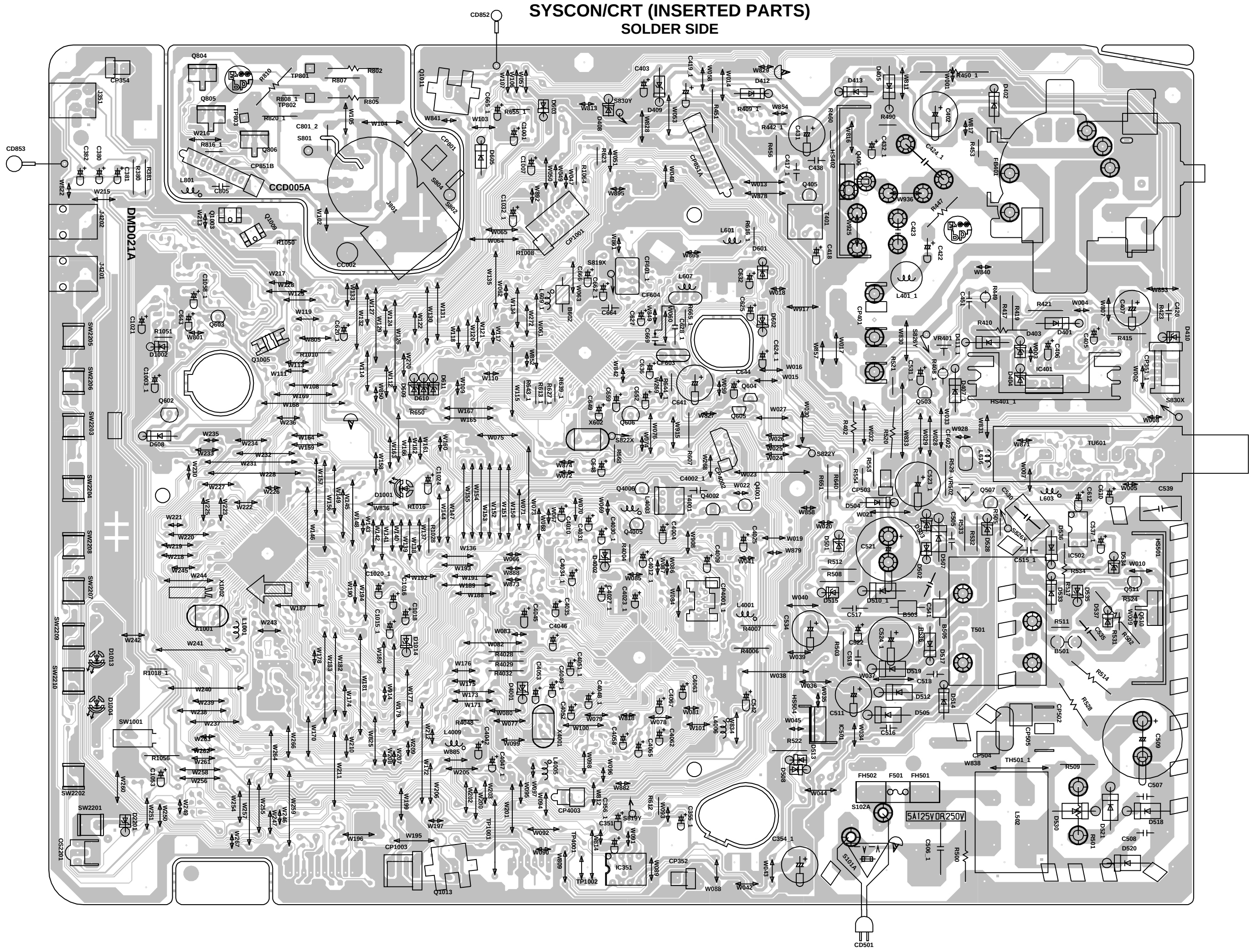

F-1

F-2

Downloaded from www.Manualslib.com manuals search engine

PRINTED CIRCUIT BOARDS
SYSCON/CRT (CHIP MOUNTED PARTS)
SOLDER SIDE

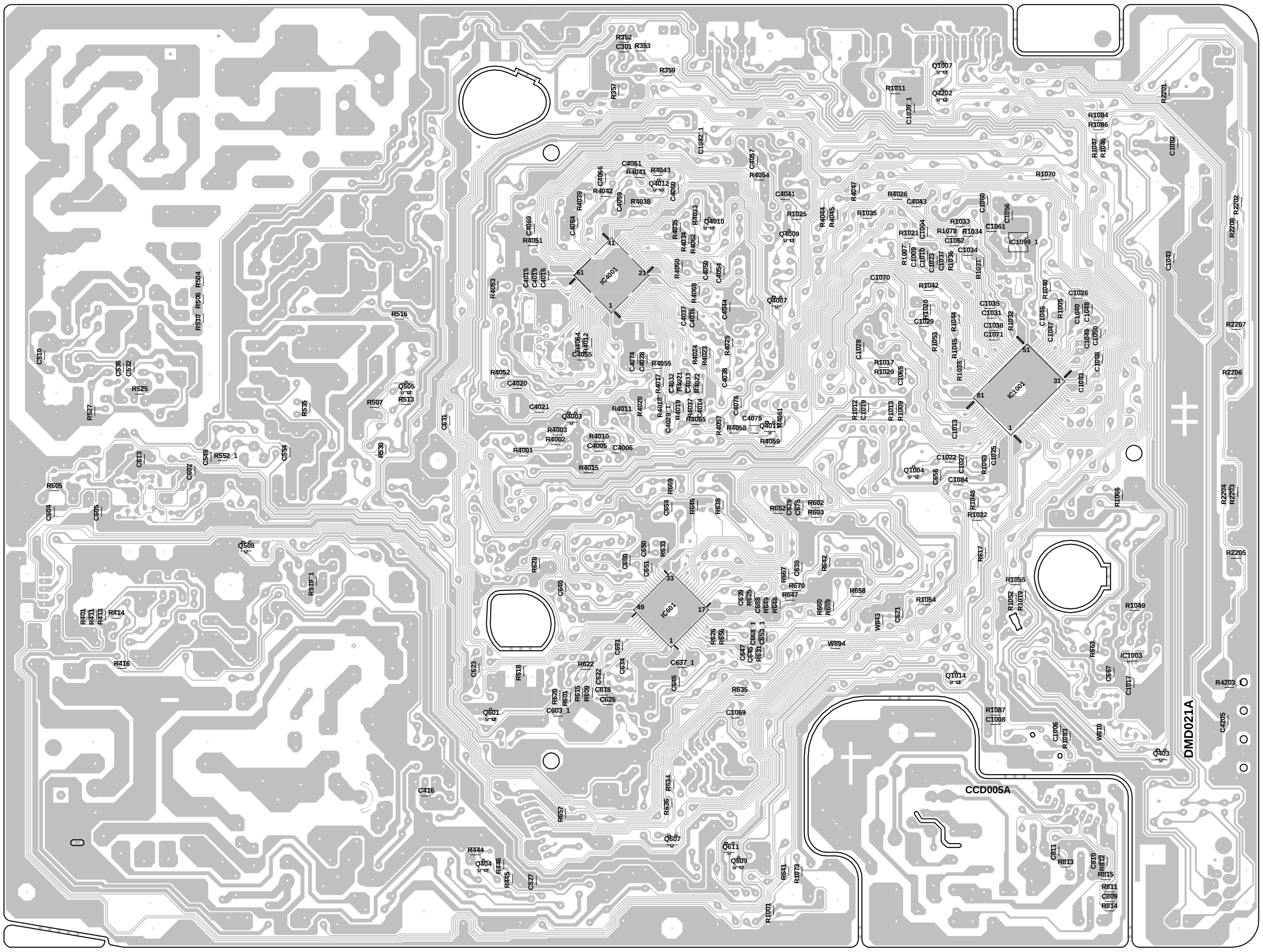

Downloaded from www.Manualslib.com manuals search engine

Y/C/AUDIO/HEAD AMP SCHEMATIC DIAGRAM
(SYSCON PCB)

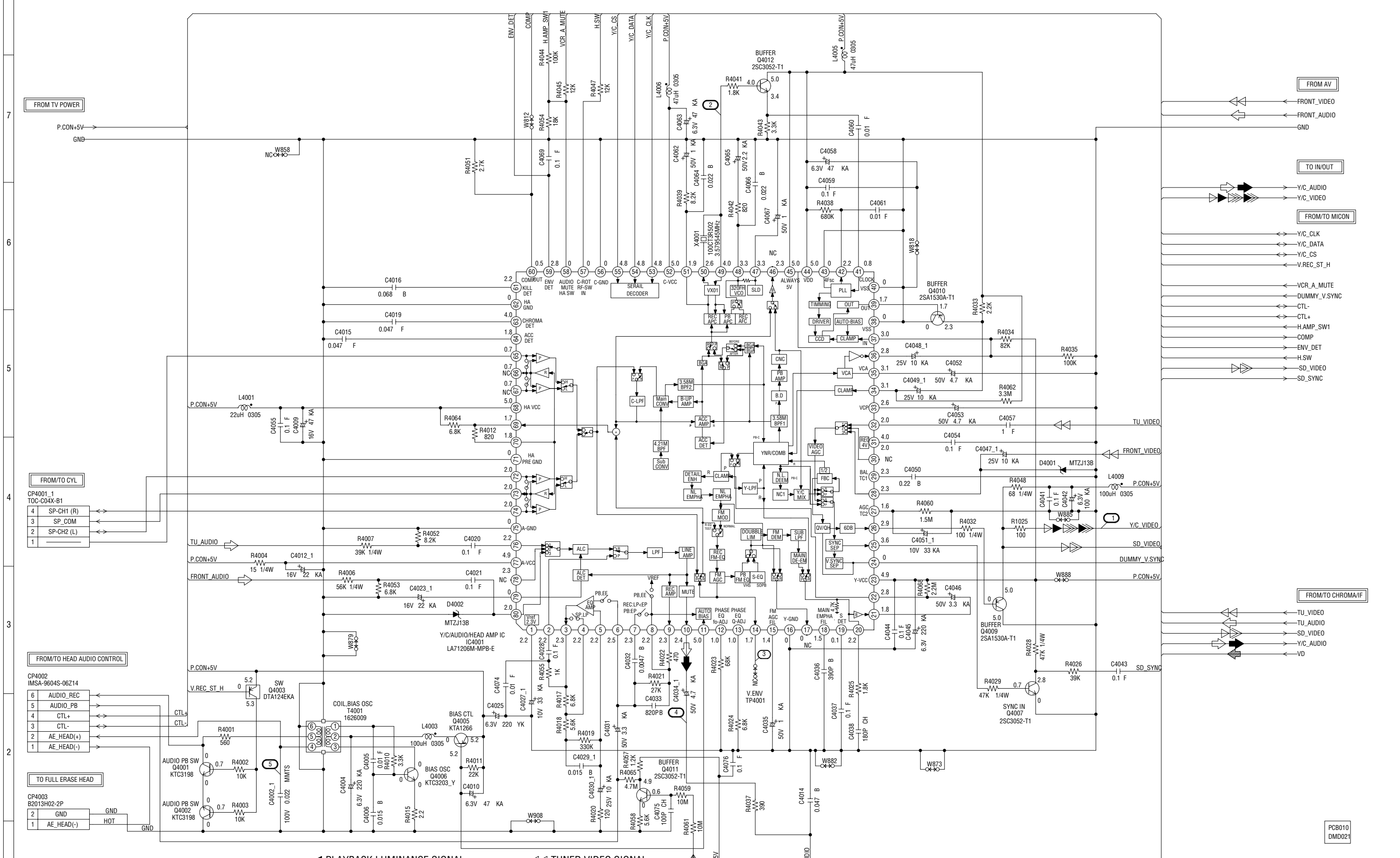

CAUTION: DIGITAL TRANSISTOR

◀ PLAYBACK LUMINANCE SIGNAL
◁ PLAYBACK COLOR SIGNAL
◀◀ RECORD LUMINANCE SIGNAL
◁◁ RECORD COLOR SIGNAL
◁◁◁ PLAYBACK VIDEO SIGNAL
◁◁ TUNER VIDEO SIGNAL
⬅ AUDIO SIGNAL(PB)
⇦ AUDIO SIGNAL(REC)
⇦ DEFLECTION SIGNAL

NOTE: THE DC VOLTAGE EACH PART WAS MEASURED WITH THE DIGITAL TESTER DURING PLAYBACK.

NOTE: THIS SCHEMATIC DIAGRAM IS THE LATEST AT THE TIME OF PRINTING AND SUBJECT TO CHANGE WITHOUT NOTICE.

Downloaded from www.Manualslib.com manuals search engine

MICON SCHEMATIC DIAGRAM (SYSCON PCB)

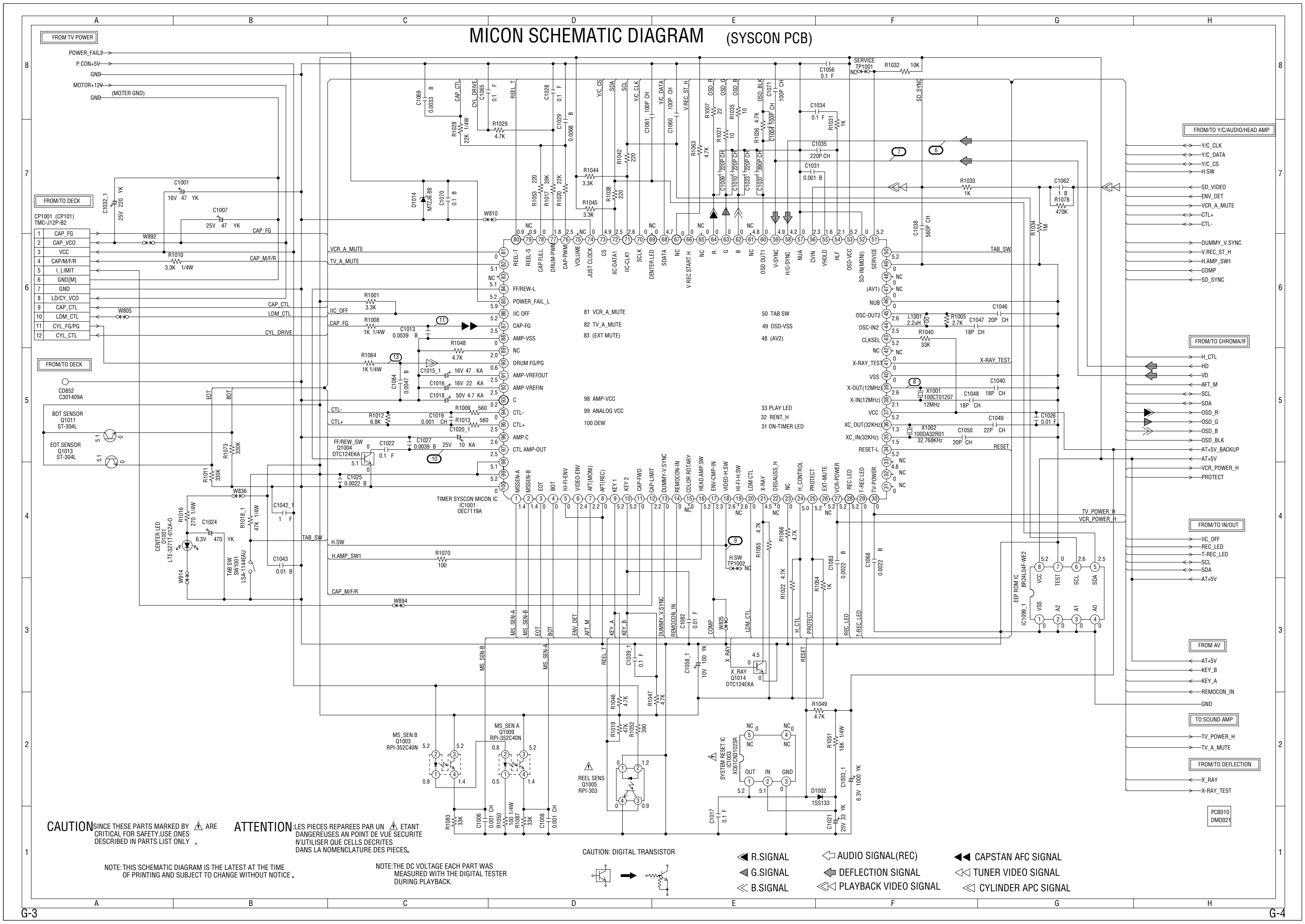

CAUTION: SINCE THESE PARTS MARKED BY ⚠ ARE CRITICAL FOR SAFETY, USE ONES DESCRIBED IN PARTS LIST ONLY 。

ATTENTION: LES PIECES REPAREES PAR UN ⚠ ETANT DANGEREUSES AN POINT DE VUE SECURITE N'UTILISER QUE CELLS DECRITES DANS LA NOMENCLATURE DES PIECES。

NOTE: THIS SCHEMATIC DIAGRAM IS THE LATEST AT THE TIME OF PRINTING AND SUBJECT TO CHANGE WITHOUT NOTICE 。

NOTE: THE DC VOLTAGE EACH PART WAS MEASURED WITH THE DIGITAL TESTER DURING PLAYBACK.

Downloaded from www.Manualslib.com manuals search engine

IN/OUT SCHEMATIC DIAGRAM

(SYSCON PCB)

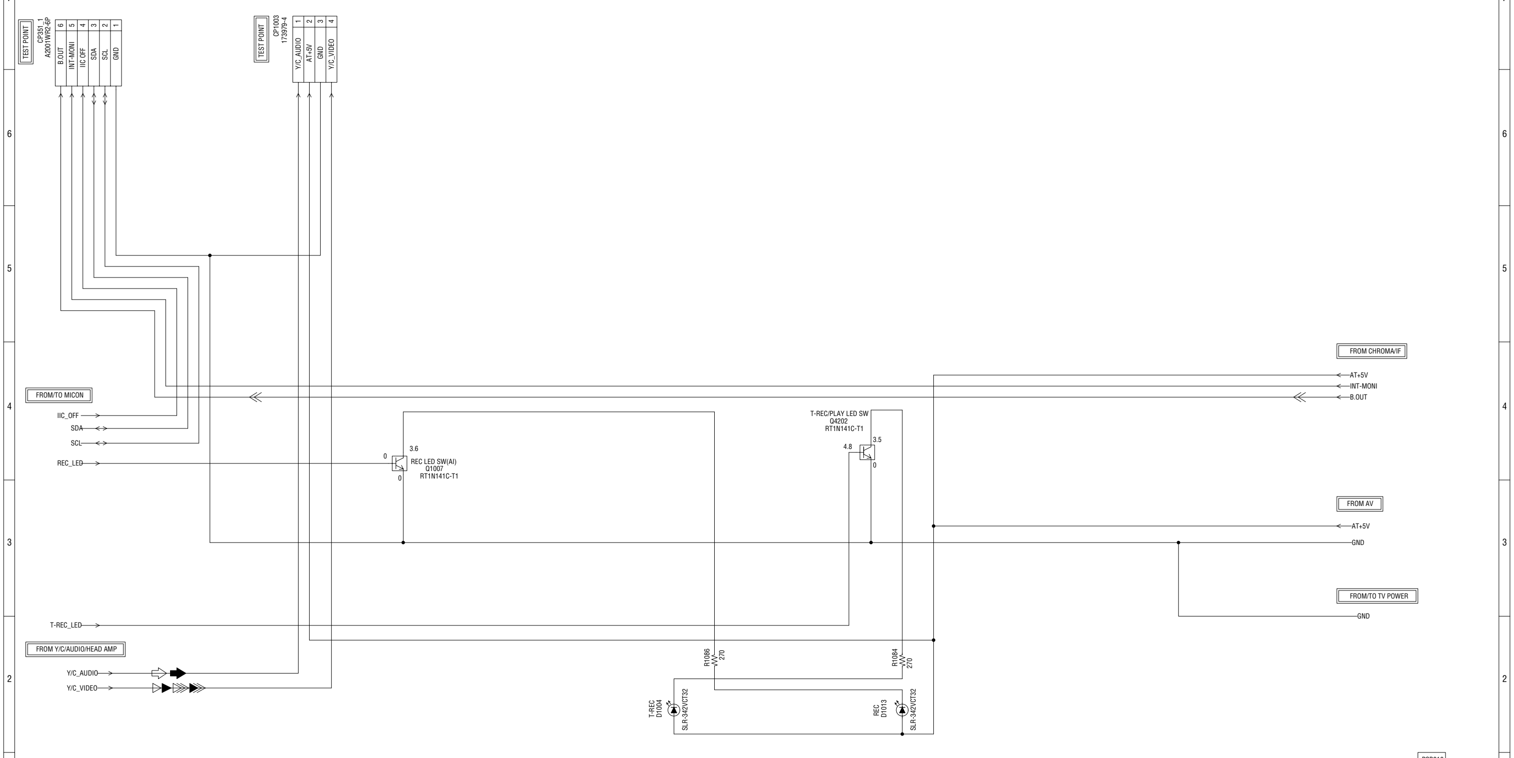

NOTE:THE DC VOLTAGE EACH PART WAS MEASURED WITH THE DIGITAL TESTER DURING PLAYBACK.

NOTE: THIS SCHEMATIC DIAGRAM IS THE LATEST AT THE TIME OF PRINTING AND SUBJECT TO CHANGE WITHOUT NOTICE.

CAUTION: DIGITAL TRANSISTOR

B.SIGNAL
TUNER VIDEO SIGNAL
AUDIO SIGNAL(REC)
AUDIO SIGNAL(PB)
RECORD LUMINANCE SIGNAL
RECORD COLOR SIGNAL
PLAYBACK LUMINANCE SIGNAL
PLAYBACK COLOR SIGNAL

Downloaded from www.Manualslib.com manuals search engine

AV SCHEMATIC DIAGRAM

(AV PCB)

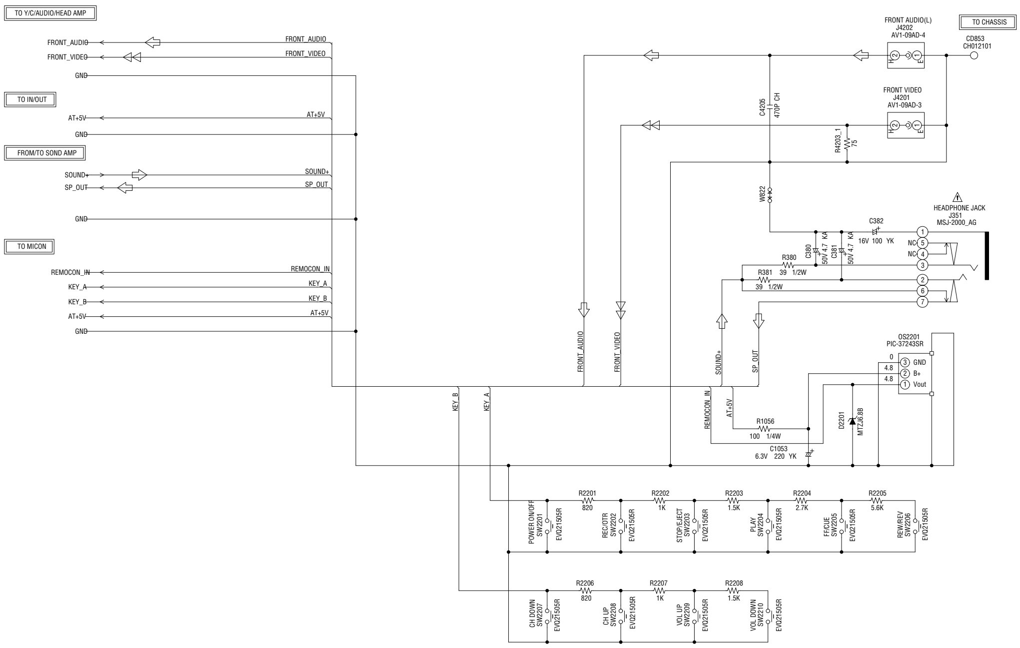

PCB010
DMD021

CAUTION SINCE THESE PARTS MARKED BY ⚠ ARE CRITICAL FOR SAFETY,USE ONES DESCRIBED IN PARTS LIST ONLY .

ATTENTION :LES PIECES REPAREES PAR UN ⚠ ETANT DANGEREUSES AN POINT DE VUE SECURITE N'UTILISER QUE CELLS DECRITES DANS LA NOMENCLATURE DES PIECES.

NOTE:THE DC VOLTAGE EACH PART WAS MEASURED WITH THE DIGITAL TESTER DURING PLAYBACK.

NOTE: THIS SCHEMATIC DIAGRAM IS THE LATEST AT THE TIME OF PRINTING AND SUBJECT TO CHANGE WITHOUT NOTICE .

◁◁ TUNER VIDEO SIGNAL
⇦ AUDIO SIGNAL(REC)

Downloaded from www.Manualslib.com manuals search engine

CHROMA/IF SCHEMATIC DIAGRAM (SYSCON PCB)

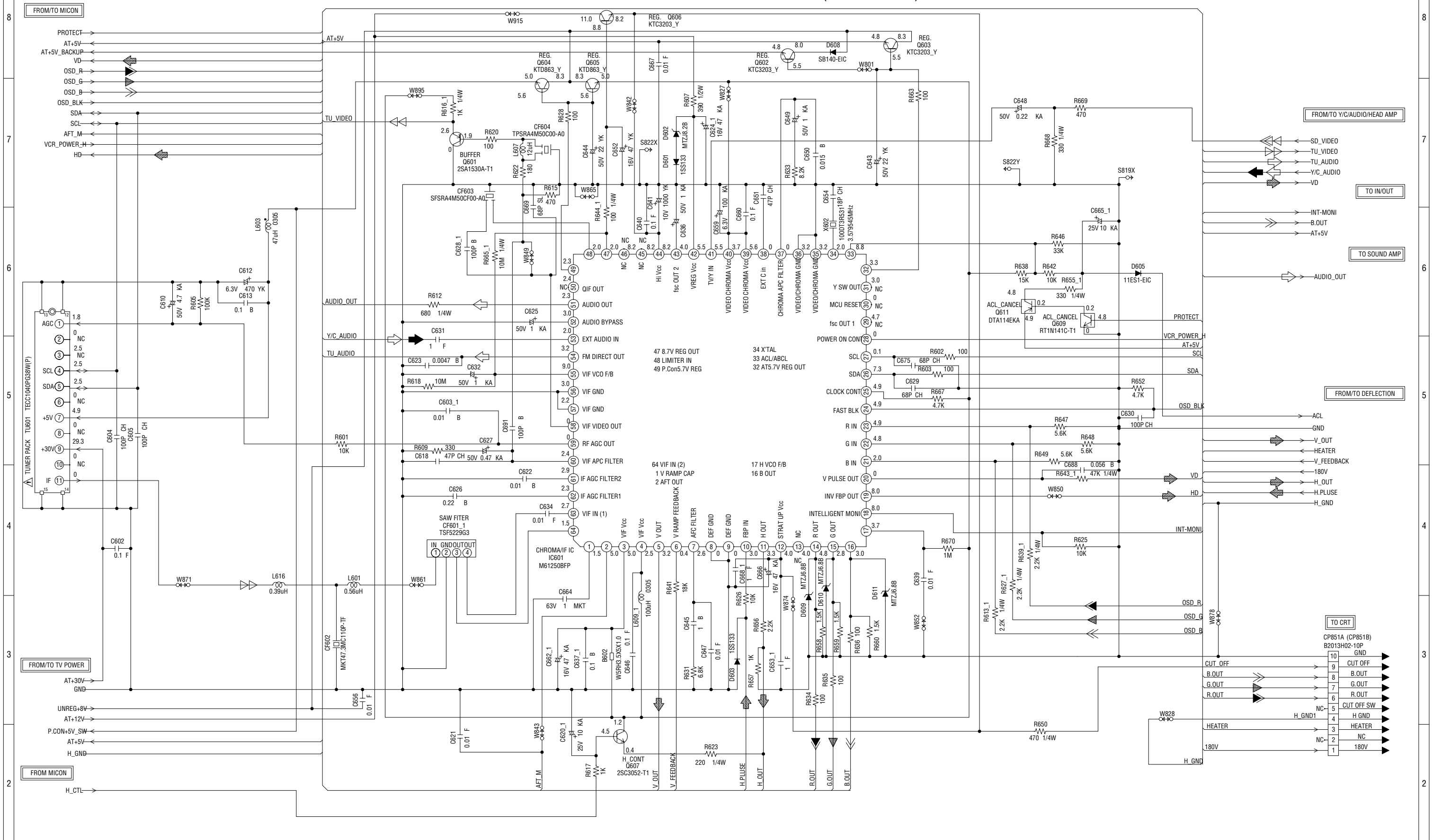

- R.SIGNAL
- G.SIGNAL
- B.SIGNAL
- AUDIO SIGNAL(PB)
- AUDIO SIGNAL(REC)
- DEFLECTION SIGNAL
- PLAYBACK VIDEO SIGNAL
- TUNER VIDEO SIGNAL

CAUTION: DIGITAL TRANSISTOR

CAUTION: DIGITAL TRANSISTOR

NOTE: THE DC VOLTAGE EACH PART WAS MEASURED WITH THE DIGITAL TESTER DURING PLAYBACK.

NOTE: THIS SCHEMATIC DIAGRAM IS THE LATEST AT THE TIME OF PRINTING AND SUBJECT TO CHANGE WITHOUT NOTICE.

CAUTION: SINCE THESE PARTS MARKED BY ⚠ ARE CRITICAL FOR SAFETY, USE ONES DESCRIBED IN PARTS LIST ONLY.

ATTENTION: LES PIECES REPAREES PAR UN ⚠ ETANT DANGEREUSES AN POINT DE VUE SECURITE N'UTILISER QUE CELLS DECRITES DANS LA NOMENCLATURE DES PIECES.

Downloaded from www.Manualslib.com manuals search engine

SOUND AMP SCHEMATIC DIAGRAM

(SYSCON PCB)

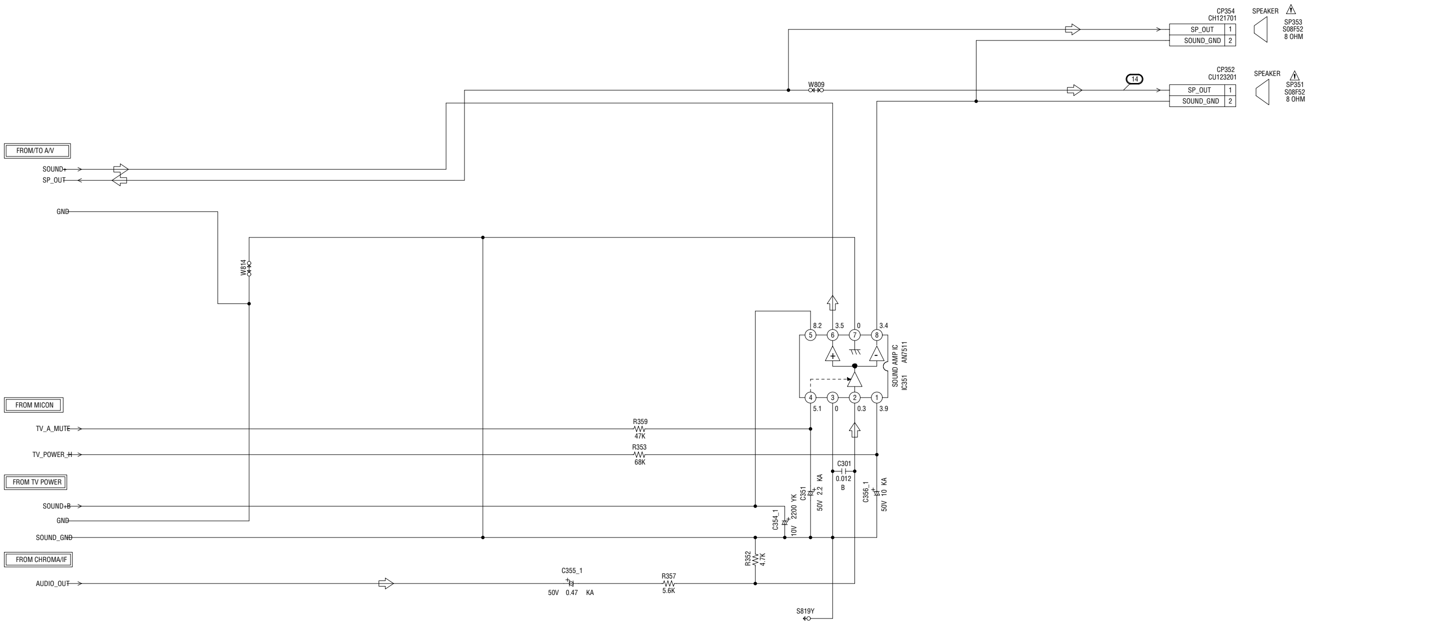

NOTE: THE DC VOLTAGE EACH PART WAS MEASURED WITH THE DIGITAL TESTER DURING PLAYBACK.

NOTE: THIS SCHEMATIC DIAGRAM IS THE LATEST AT THE TIME OF PRINTING AND SUBJECT TO CHANGE WITHOUT NOTICE.

CAUTION: SINCE THESE PARTS MARKED BY ⚠ ARE CRITICAL FOR SAFETY, USE ONES DESCRIBED IN PARTS LIST ONLY.

ATTENTION: LES PIECES REPAREES PAR UN ⚠ ETANT DANGEREUSES AN POINT DE VUE SECURITE N'UTILISER QUE CELLS DECRITES DANS LA NOMENCLATURE DES PIECES.

⇦ AUDIO SIGNAL(REC)

Downloaded from www.Manualslib.com manuals search engine

POWER SCHEMATIC DIAGRAM

(SYSCON PCB)

5A 125V

CAUTION: FOR CONTINUED PROTECTION AGAINST FIRE HAZARD, REPLACE ONLY WITH THE SAME TYPE FUSE 5A 125V (F501).

ATTENTION: POUR UNE PROTECTION CONTINUE LES RISQUES D'INCEIE N'UTILISER QUE DES FUSIBLE DE MEME TYPE 5A 125V (F501).

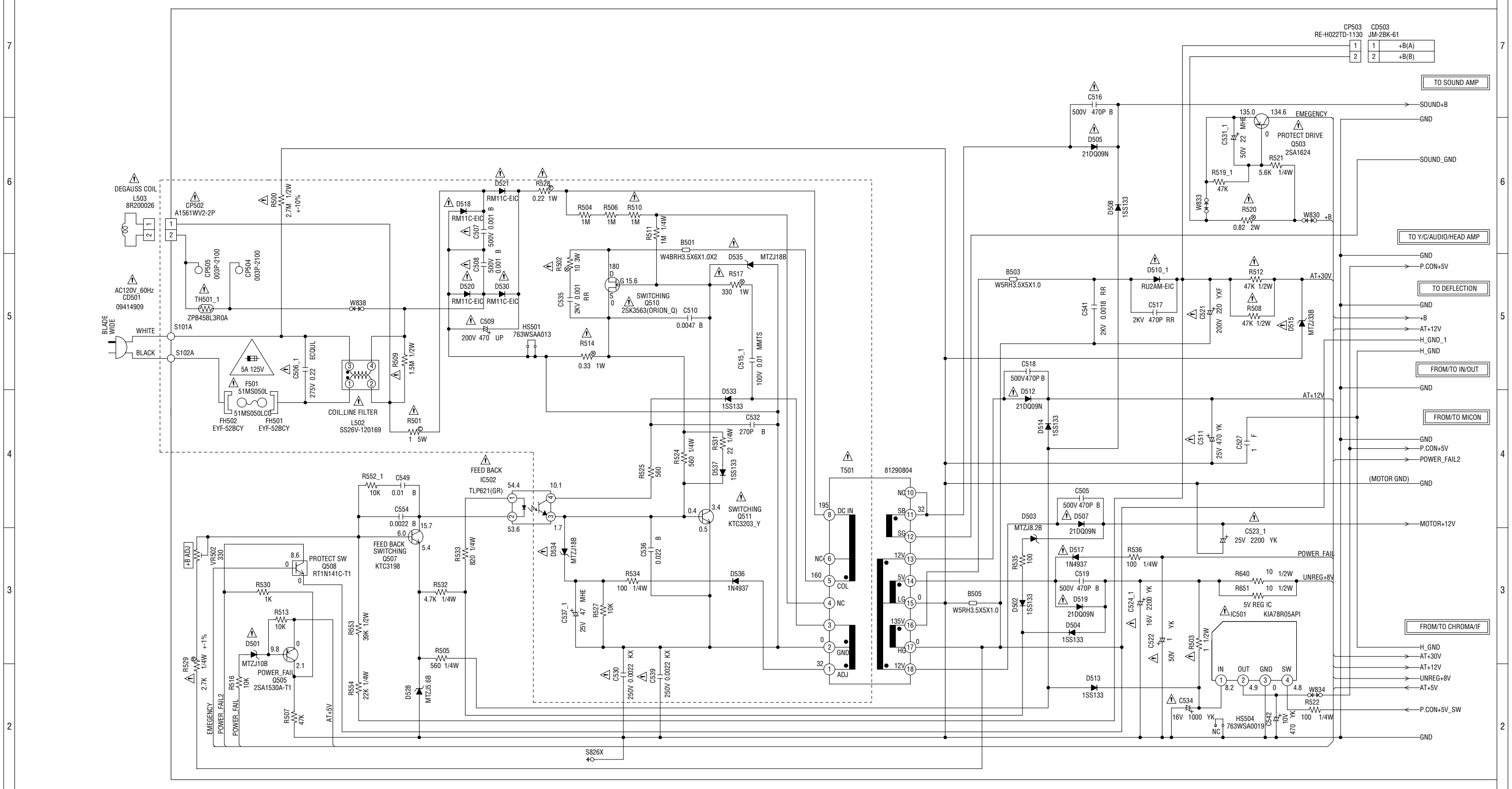

PCB010
DMD021

NOTE: THE RESISTOR MARKED F IS FUSE RESISTOR.
THE ALUMI ELECTROLYTIC CAPACITOR MARKED NP IS NON POLAR ONE.

NOTE: THE DC VOLTAGE AT EACH PART WAS MEASURED WITH THE DIGITAL TESTER WHEN THE COLOR BROADCAST WAS RECEIVED IN GOOD CONDITION AND PICTURE IS NORMAL.

NOTE: THIS SCHEMATIC DIAGRAM IS THE LATEST AT THE TIME OF PRINTING AND SUBJECT TO CHANGE WITHOUT NOTICE.

CAUTION SINCE THESE PARTS MARKED BY ⚠ ARE CRITICAL FOR SAFETY,USE ONES DESCRIBED IN PARTS LIST ONLY.

ATTENTION LES PIECES REPAREES PAR UN ⚠ ETANT DANGEREUSES AN POINT DE VUE SECURITE N'UTILISER QUE CELLS DECRITES DANS LA NOMENCLATURE DES PIECES.

CAUTION: DIGITAL TRANSISTOR

Downloaded from www.Manualslib.com manuals search engine

DEFLECTION SCHEMATIC DIAGRAM

(SYSCON PCB)

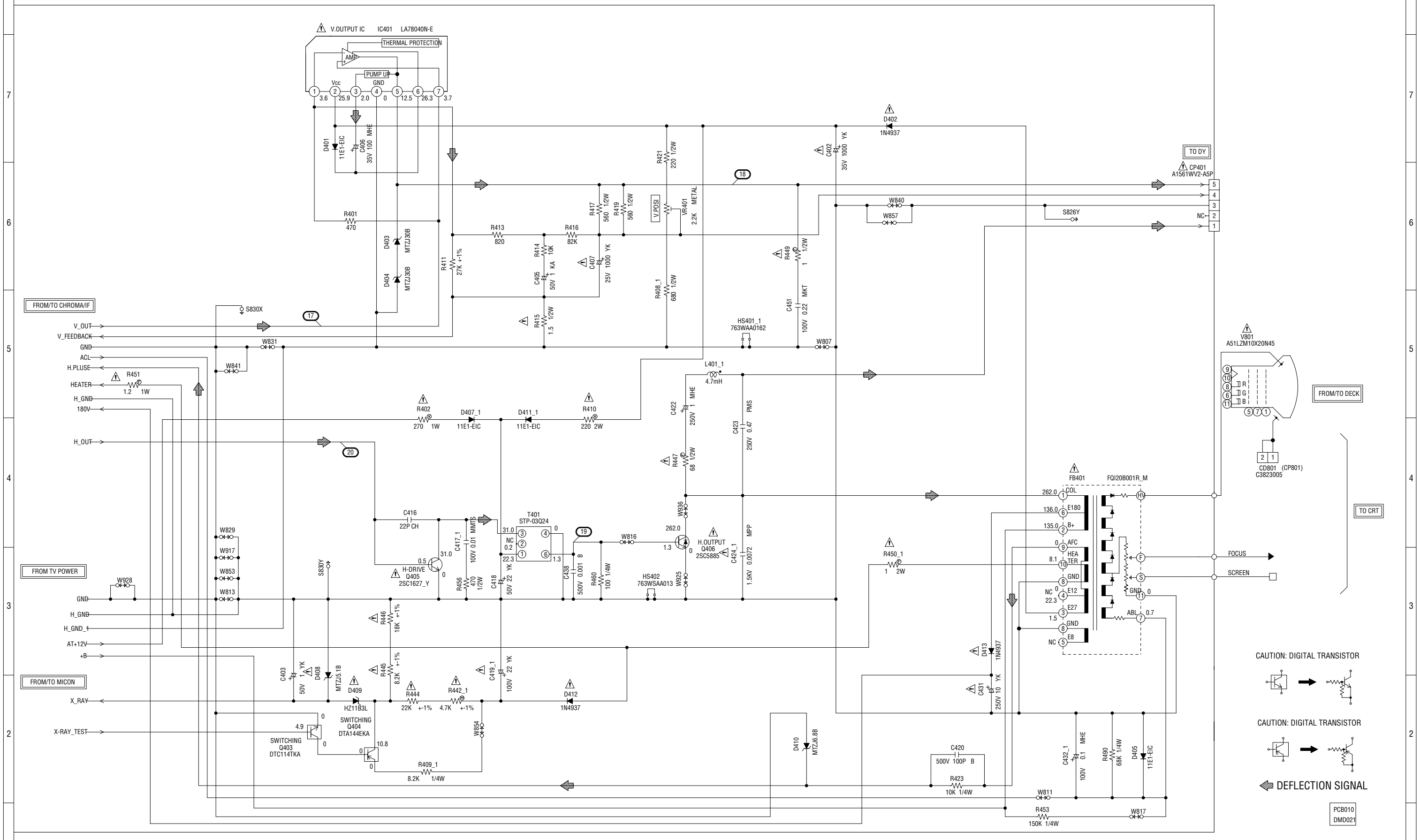

NOTE: THE DC VOLTAGE AT EACH PART WAS MEASURED WITH THE DIGITAL TESTER WHEN THE COLOR BROADCAST WAS RECEIVED IN GOOD CONDITION AND PICTURE IS NORMAL.

NOTE: THIS SCHEMATIC DIAGRAM IS THE LATEST AT THE TIME OF PRINTING AND SUBJECT TO CHANGE WITHOUT NOTICE.

CAUTION: SINCE THESE PARTS MARKED BY ⚠ ARE CRITICAL FOR SAFETY, USE ONES DESCRIBED IN PARTS LIST ONLY.

ATTENTION: LES PIECES REPAREES PAR UN ⚠ ETANT DANGEREUSES AN POINT DE VUE SECURITE N'UTILISER QUE CELLS DECRITES DANS LA NOMENCLATURE DES PIECES.

NOTE: THE RESISTOR MARKED F IS FUSE RESISTOR. THE ALUMI ELECTROLYTIC CAPACITOR MARKED NP IS NON POLAR ONE.

Downloaded from www.Manualslib.com manuals search engine

CRT SCHEMATIC DIAGRAM

(CRT PCB)

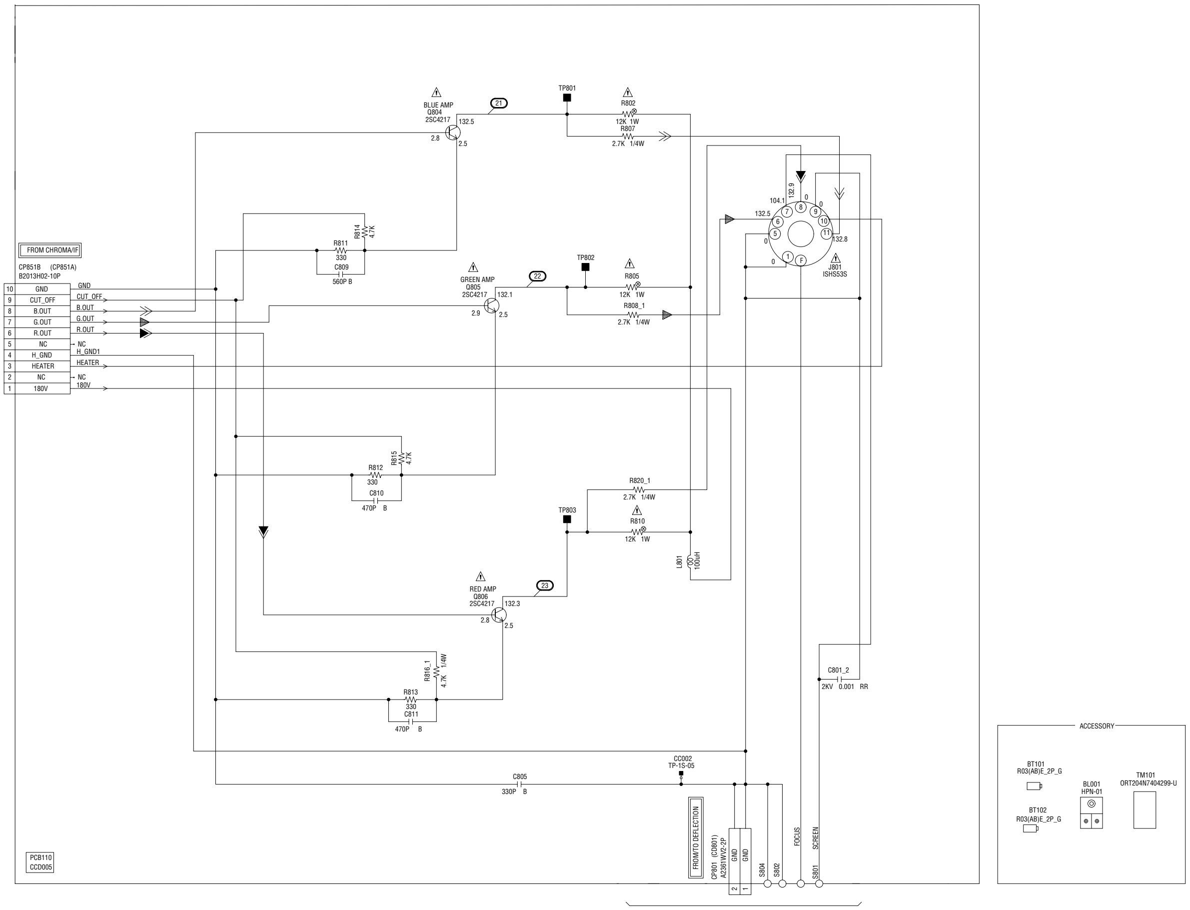

NOTE:THE DC VOLTAGE AT EACH PART WAS MEASURED WITH THE DIGITAL TESTER WHEN THE COLOR BROADCAST WAS RECEIVED IN GOOD CONDITION AND PICTURE IS NORMAL.

NOTE: THIS SCHEMATIC DIAGRAM IS THE LATEST AT THE TIME OF PRINTING AND SUBJECT TO CHANGE WITHOUT NOTICE。

CAUTION: SINCE THESE PARTS MARKED BY ⚠ ARE CRITICAL FOR SAFETY,USE ONES DESCRIBED IN PARTS LIST ONLY 。

ATTENTION: LES PIECES REPAREES PAR UN ⚠ ETANT DANGEREUSES AN POINT DE VUE SECURITE N'UTILISER QUE CELLS DECRITES DANS LA NOMENCLATURE DES PIECES。

◀ R.SIGNAL
◀ G.SIGNAL
≪ B.SIGNAL

Downloaded from www.Manualslib.com manuals search engine

INTERCONNECTION DIAGRAM

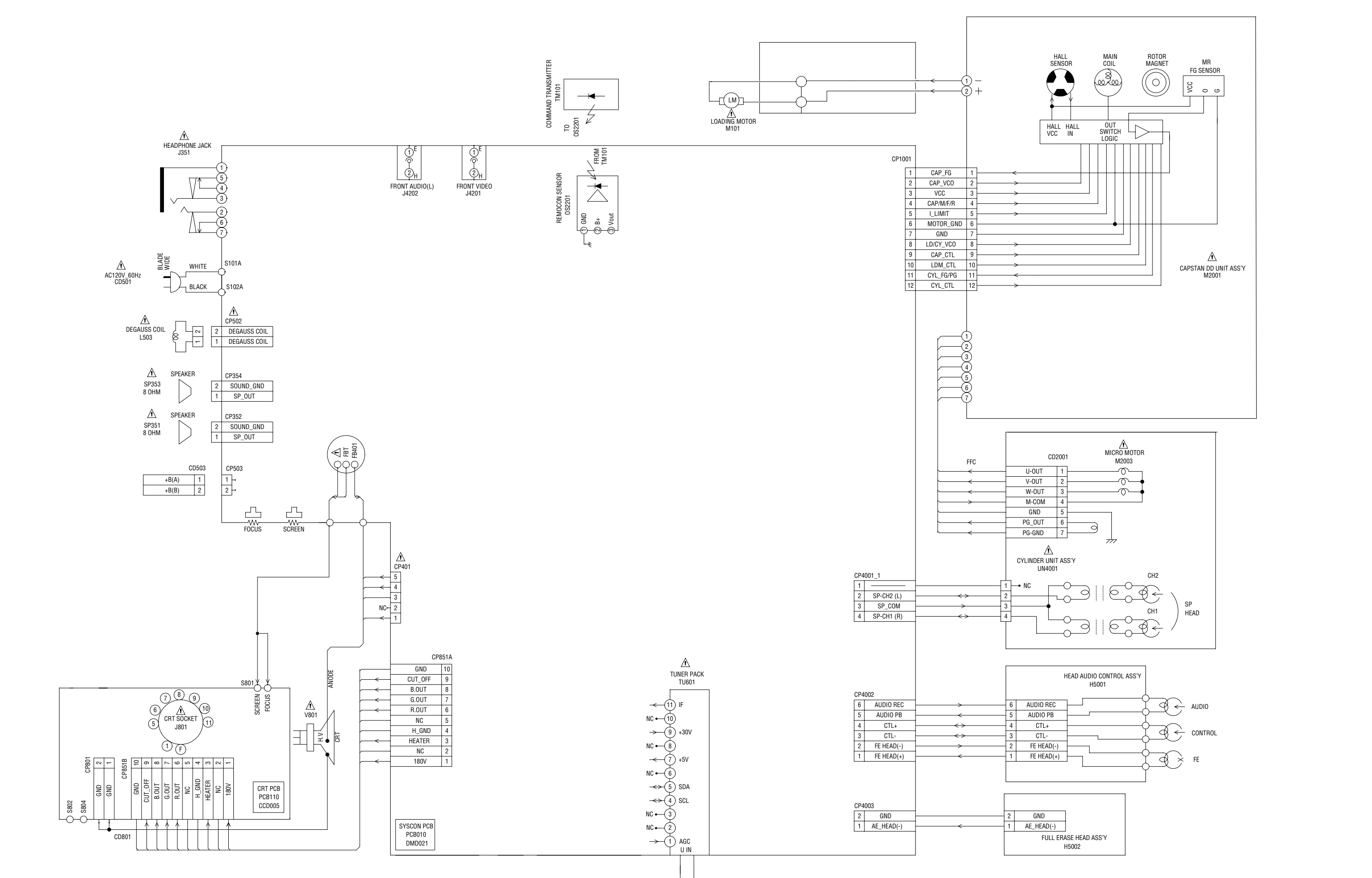

NOTE: THIS INTERCONNECTION DIAGRAM IS THE LATEST AT THE TIME OF PRINTING AND SUBJECT TO CHANGE WITHOUT NOTICE.

CAUTION: SINCE THESE PARTS MARKED BY ⚠ ARE CRITICAL FOR SAFETY, USE ONES DESCRIBED IN PARTS LIST ONLY.

ATTENTION: LES PIECES REPAREES PAR UN ⚠ ETANT DANGEREUSES AN POINT DE VUE SECURITE N'UTILISER QUE CELLS DECRITES DANS LA NOMENCLATURE DES PIECES.

Downloaded from www.Manualslib.com manuals search engine

WAVEFORMS

Y/C/AUDIO/HEAD AMP

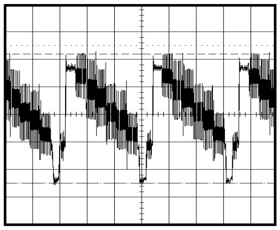

(1) PB
0.5V 20µs/div

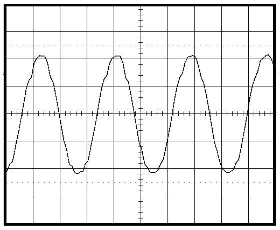

(2) POWER ON
100mV 0.1µs/div

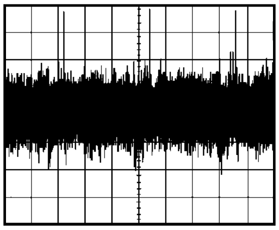

(3) PB
10mV 20µs/div

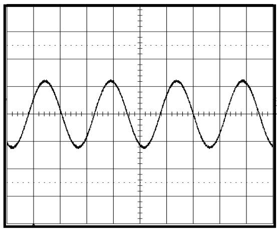

(4) PB
0.5V 1ms/div

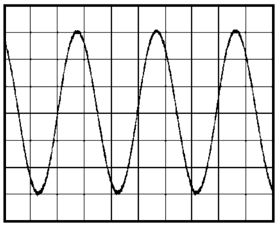

(5) REC
10.0V 5µs/div

MICON

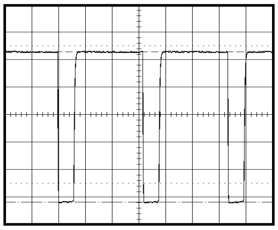

(6) POWER ON
1.0V 20µs/div

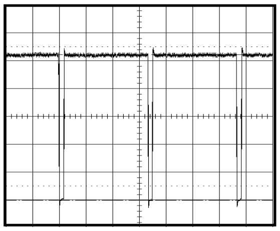

(7) POWER ON
0.5V 10ms/div

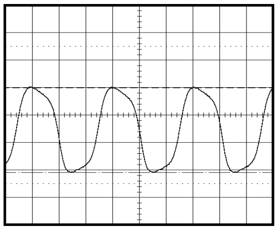

(8) POWER ON
1.0V 10µs/div

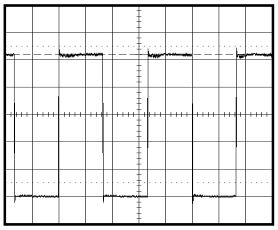

(9) PB
1.0V 10ms/div

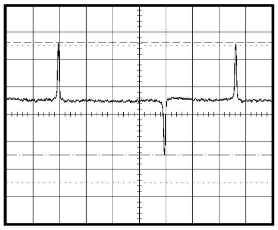

(10) PB
1.0V 5ms/div

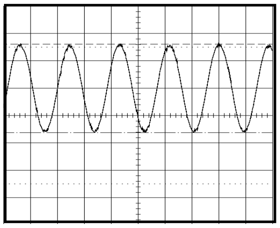

(11) PB
0.5V 0.5ms/div

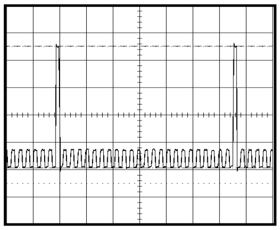

(13) PB
1.0V 5ms/div

SOUND AMP

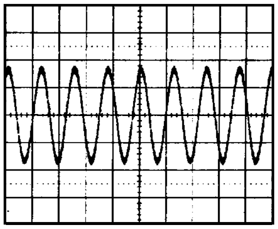

(14) POWER ON
200mV 2ms/div

DEFLECTION

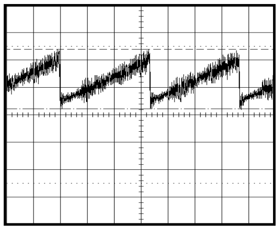

(17) POWER ON
0.5V 5ms/div

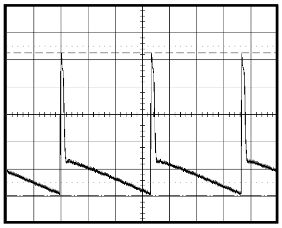

(18) POWER ON
10.0V 5ms/div

NOTE: The following waveforms were measured at the point of the corresponding balloon number in the schematic diagram.

Downloaded from www.Manualslib.com manuals search engine

WAVEFORMS

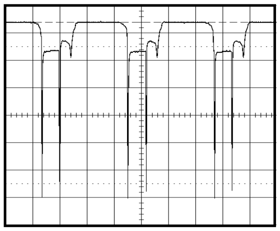

(19) POWER ON
2.0V 20µs/div

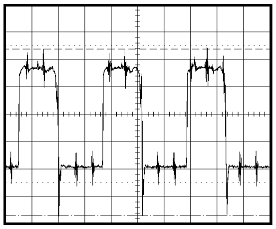

(20) POWER ON
200mV 20µs/div

CRT

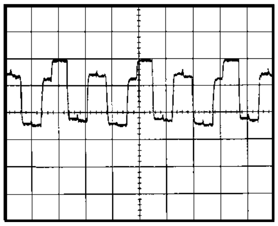

(21) POWER ON
50.0V 20µs/div

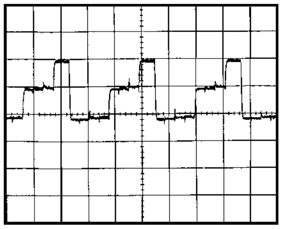

(22) POWER ON
50.0V 20µs/div

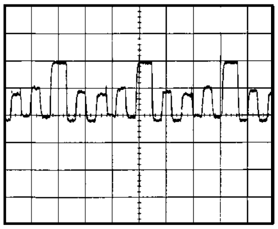

(23) POWER ON
50.0V 20µs/div

NOTE: The following waveforms were measured at the point of the corresponding balloon number in the schematic diagram.

Downloaded from www.Manualslib.com manuals search engine